48th AIAA/ASME/SAE/ASEE Joint Propulsion Conference & Exhibit
30 July - 01 August 2012, Atlanta, Georgia

AIAA 2012-3908

Modelling and Simulation of Film Cooling in Liquid Rocket Engine Propulsion Systems

Francesco Di Matteo[§*], Matteo Venanzi[§], Barbara Betti[§], Marco De Rosa[*], Marcello Onofri[§]

[§]Sapienza University of Rome
Dipartimento di Ingegneria Meccanica e Aerospaziale, Via Eudossiana 18, I-00184 Rome, Italy
[*]ESA-ESTEC, Propulsion Engineering
Keplerlaan 1, 2201AZ Noordwijk, Netherlands

The use of system modelling tools for design and transient analysis of LRE is becoming more and more common since their accuracy is constantly improving. But for this kind of tools prediction of film cooling effectiveness is still a challenging problem. A film cooling model capable of describing the benefits of such a cooling technique, as well as the impacts on the propulsion system such as loss in performance and requirements induced on other subsystems, can support the preliminary design of LRE systems.

EcosimPro is an object oriented tool capable of modelling various kinds of dynamic systems. The model described within this paper is implemented alongside ESPSS[7] the propulsion system library compatible with EcosimPro. This paper covers a Quasi 2-D integral formulation to study the developed flow field of a film wall jet in combustion chambers. With this approach it is possible to have a fast prediction of the evolution in space and time of both coolant and wall temperature distribution therefore also of the film cooling effectiveness.

A new model is here presented: a "layered model" based on the assumption that the mixing zone does not affect the film and mainstream flows but it is a result of their interaction. The geometry of the developed flow field is based on the one carried out by Simon[12] and it accounts for the core, mixing and film regions. The governing equations already present in the original combustion chamber model are used as a starting point. The implementation here described can easily be embedded in an unsteady propulsion system analysis for simulating the its transient phases and steady state operation points. The code flexibility allows for using the same model also for performance analysis in steady-state, and for off-design studies. First validation results are given here, in particular a DLR H_2/O_2 combustion chamber film cooling test campaign has been taken as reference case for validation purposes.

Nomenclature

A	Area, m^2
b	Wall jet thickness, m
C_m	Mixing coefficient, -
E	Energy per unit of mass, J/kg
$F(R)$	Jet interface position function, -
h	Flow total enthalpy, kJ/kg
h_c	Convective heat transfer coefficient, W/(m^2·K)
M	Blowing ratio, $\frac{\rho_s\, v_s}{\rho_\infty\, v_\infty}$, -
$\dot{m}$	Mass flow rate, kg/s
P	Static pressure, bar
$\dot{Q}$	Heat flow , W
$\dot{q}$	Heat flux density, W/m^2
R	Velocity ratio, $\frac{v_\infty}{v_s}$, -
S	Film injection slot height, m
St	Stanton number, -
T	Temperature, K
v	Flow velocity, m/s
x	Distance downstream of the slot, m

Copyright © 2012 by F. Di Matteo, M. Venanzi. Published by the American Institute of Aeronautics and Astronautics, Inc., with permission.

Downloaded by CARLETON UNIVERSITY LIBRARY on November 29, 2014 | http://arc.aiaa.org | DOI: 10.2514/6.2012-3908

x^{nc} Non-condensable gas mass fraction, -
ρ Density, kg/m^3
y_1 Wall-jet/coolant interface position, m
y_2 Wall-jet/mainstream interface position, m
ξ Friction factor coefficient, -

Subscript
aw adiabatic wall
c core
cc combustion chamber
m mix
s film
th throat
w wall

Supscript
$-$ averaged property

Downloaded by CARLETON UNIVERSITY LIBRARY on November 29, 2014 | http://arc.aiaa.org | DOI: 10.2514/6.2012-3908

I. Introduction

One of the most challenging issues in rocket engines is the thermal management of the system components. Heat fluxes of tens of MW/m^2 are usually involved in such systems. These systems are required to develop such great thrust with an impressive amount of power, since the common mission times of these engines are measured in seconds. Thrust is generated only by using an internal energy source converted in an useful way.

The conversion and releasing process of such an energy to generate thrust always involves cooling problems. The high temperatures reached inside the thrust chambers are well above the melting point of the most advanced materials. This induces the necessity of a cooling system to assure operational safety, limiting the temperature in the ranges where materials used exhibit the desired characteristics.

Cooling systems such as regenerative cooling, dump cooling, transpiration cooling, ablation cooling, film cooling and radiation cooling are usually used in combination. Film cooling involves the injection of a secondary fluid on the exposed surface of the component to be cooled. In film cooling the added fluid can be injected in several ways. Holes or slots are most commonly used and various configurations have been investigated.[8]

Recently thermal design concepts include film cooling as one of the favourable cooling methods. Film cooling has significant advantages: high cooling efficiency, simple thrust chamber construction, and relatively low pressure drop. These features make the use of film cooling very attractive when a new generation propulsion system is designed.

The main objective of this work is to develop a liquid rocket engine combustion chamber with film cooling model[15] and to validate it by comparison with numerical and experimental results. This new model for the combustion chamber component enabling to study film cooling has been developed and implemented alongside ESPSS[7] (European Space Propulsion System Simulation) and is discussed in the present paper.

II. Modelling of Film Cooling

A. Original Combustion Chamber Model

The thrust chamber component, inherited from the original ESPSS library, represents a non adiabatic 1-D combustion process inside a chamber for liquid or gas propellants. The equilibrium combustion gases properties (molar fraction, thermodynamic and transport properties) are calculated for each chamber volume (node) using the minimum Gibbs energy method[9] as a function of the propellants mixture molar fractions, inlet conditions and chamber pressure. Transient chamber conditions (pressures, temperatures, mass flows and heat exchanged with the walls) are derived from 1-D transient conservation equations. A mixture equation between the injected propellants and the combustion gases is applied. From the derivation of the mixture ratio MR definition, the following dynamic equation gives the MR evolution:

$$\dot{m}_{ox} = MR\,\dot{m}_{fu} + \frac{d}{dt}\left(MR\right)\frac{\rho V_{ch}}{1+MR} \tag{1}$$

Combustion takes place when mixture ratio is within the flammability limits, the ignition flag is active and a minimum time (ignition delay) τ has elapsed. Mass, energy and momentum equations are described in Equations (2),(3),(4).

$$\frac{\partial \boldsymbol{u}}{\partial t} + \frac{\partial f(\boldsymbol{u})}{\partial x} = S(\boldsymbol{u}) \tag{2}$$

where

$$\boldsymbol{u} = A\begin{bmatrix}\rho\\ \rho x^{nc}\\ \rho v\\ \rho E\end{bmatrix}; \quad f(\boldsymbol{u}) = A\begin{bmatrix}\rho v\\ \rho v x^{nc}\\ \rho v^2 + P\\ \rho v h\end{bmatrix}; \tag{3}$$

$$S(\boldsymbol{u}) = \begin{bmatrix}0\\ 0\\ -0.5(d\xi/dx)\rho\ v|v|A + \rho g A + P(dA/dx)\\ \dot{q}_w(dA_{wet}/dx) + \rho g v A\end{bmatrix} \tag{4}$$

The centred scheme is used to discretise the chamber, using a staggered mesh approach. The walls are taken as a boundary for the heat exchange calculation instead:

$$\dot{q}_{wall} = h_c A_{wet}(T_{aw} - T_w) + \sigma A_{wet}(T_{core}^4 - T_w^4) \tag{5}$$

In the combustion chamber component the heat transfer coefficient h_c can be evaluated by different correlations (original Bartz equation, modified Bartz equation, Pavli equation). Please refer to the paper presented at Space Propulsion Conference 2010[6] for a detailed description of the heat transfer correlation models.

B. Modelling of Combustion chambers with film cooling

The development of the film cooled combustion chamber was done starting from the component present in the standard ESPSS library. This enables to focus directly on the main objective of the modelling: predicting the different chamber wall temperature and heat fluxes with respect to the case without film cooling.

Taking advantage of previous works[4,5] and the experimental evidences[3,14] showing the linear growth rate of the mixing region, the idea is to assign to the developed flow field, for given inlet conditions, a three zones geometry as shown in Figure 1: a *core* zone, a *mixing* zone and a *coolant* zone. The entrained mass flow rates and the quantities exchanged between the main stream, the mixing and the potential core zones are computed by geometrical correlations. All three zones are assumed to have the same pressure for any given cross section of the combustion chamber, determined as if no film cooling were present.

In the case of ideal fluids (no viscosity), the flow would be characterized by a contact discontinuity instead of a shear layer (i.e. the mixing zone). Given a geometry of the mixing zone, it is assumed that the propagation of disturbances due to the viscosity is limited in space within the area determined by such geometry. Hence, under this assumption, the main stream and film flows, external to the mixing zone, do not influence each other until they enter in this confined region. The fluid properties in the mixing zone are evaluated by the entrained main stream and coolant mass and energy inflows.

This zone is therefore determined by fluids not yet affected by the shear layer, that is, the flow fields that would have been developed if no interaction were considered. Under these assumptions, a layered model is conceived, in which the mixing region is established by the properties of two uncoupled fluids. So on the layer A two parallel fluids flow without affecting each other. The interaction is taken into account on a distinct layer B, where the mixing region is developed.

On this latter layer, only the mixing region exists and its properties are determined by the mass and energy inflows based on the properties of the fluids on layer A. This concept is illustrated in Figure 2 .

Downloaded by CARLETON UNIVERSITY LIBRARY on November 29, 2014 | http://arc.aiaa.org | DOI: 10.2514/6.2012-3908

Downloaded by CARLETON UNIVERSITY LIBRARY on November 29, 2014 | http://arc.aiaa.org | DOI: 10.2514/6.2012-3908

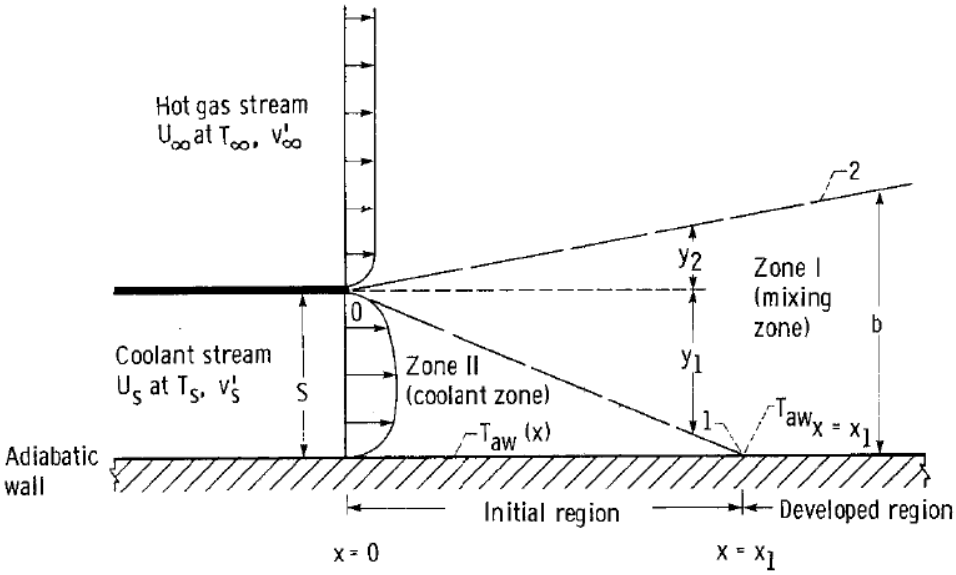

Figure 1. Geometry of the developed flow field as assumed by Simon's model[12]

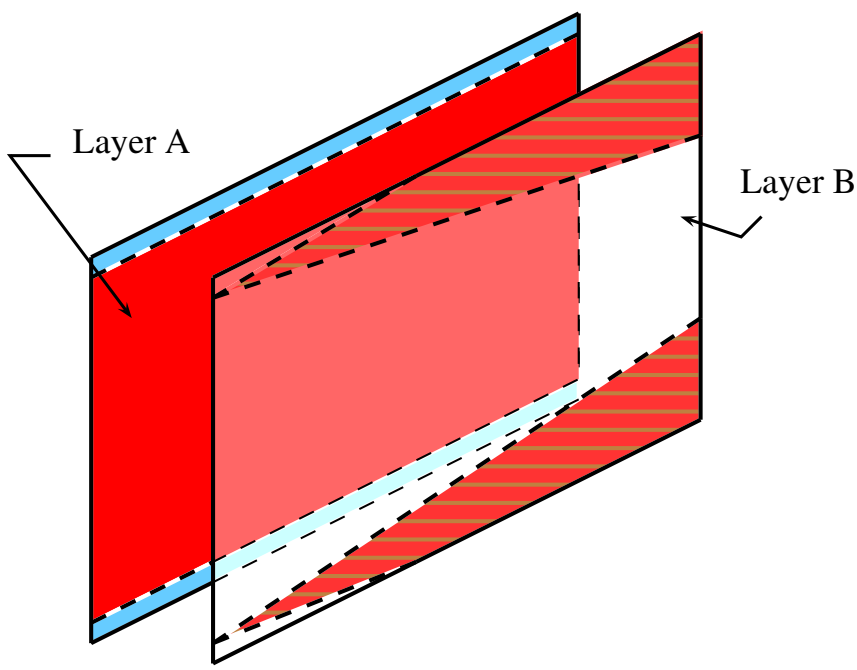

Figure 2. Flow field separation into two layers

The geometrical model of the developed flow field as well as the transient equations describing the state of the three different zones are presented hereafter.

Flow field geometries

Figure 1 depicts such geometry as assumed in Simons model. The unknown quantities are the length of the initial region (called potential core) and the growth rate of the mixing zone. The former defines the region characterized by the coolant properties so the wall temperature and convective heat flux is determined by film conditions, whilst in the fully developed region, the wall conditions are determined by the mixing zone conditions. The value of x_1 is defined by an iterative procedure and it is given by:

$$x_1 = \frac{1}{\left(\frac{C_m}{S}\right) F(R)} \tag{6}$$

where, C_m is the mixing coefficient, $F(R)$ is the jet interface position function and S represents the slot height.

The growth rate of the mixing zone describes the slope of the interface between the core zone and the mixing zone.

Potential core length

The length of the potential core, denoted by x_1, is determined by the impingement point of the linear film-mix interface. x_1 represents the transition point between the potential core and the fully developed regions. Its determination is of fundamental importance because the transition between the two aforementioned regions corresponds to a transition in the film cooling efficiency trend. Simon included in his model an iterative procedure to evaluate x_1, as explained by the flow chart of Figure 3. The F(R) function involved

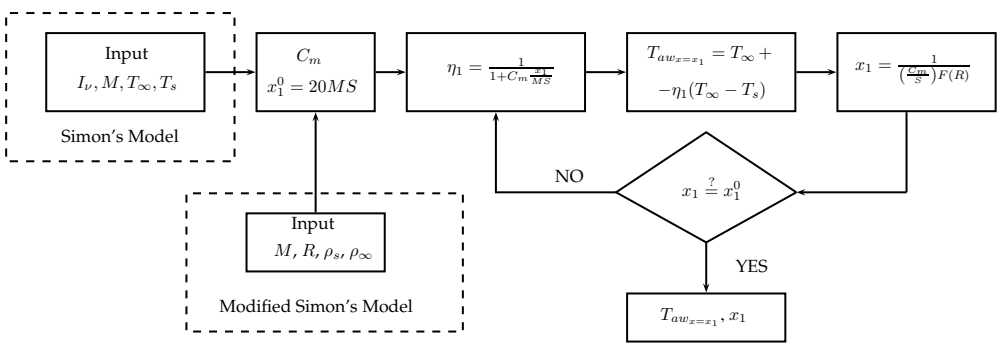

Figure 3. Iterative procedure for determining x_1

in such an iterative procedure is taken from Abramovich's semi-empirical theory of incompressible turbulent shear layers[1]

$$F(R) = \frac{y_1}{y_2} = \frac{1}{\dfrac{1}{\frac{\overline{\rho}_m}{\rho_s}(0.416 + 0.134\,R)} - 1}$$

Since the pressure is constant across the mixing region, by assuming same fluid composition and negligible C_p variations in temperature, Simon substituted the density ratio with the temperature ratio:

$$\frac{\overline{\rho}_m}{\rho_s} = \frac{T_s}{T_{aw,x=x_1}}$$

With such position the outputs of the iterative procedure are the potential core length x_1 and the adiabatic wall temperature at this location $T_{aw_{x1}}$.

This procedure for determining x_1 was modified in the present work in order to consider the case of two different fluids, high temperatures ratios and C_p variable in temperature, which are typically experienced in LRE combustion chambers with film cooling. The F(R) function is computed by means of the density ratio rather than the temperature ratio where the average density of the mixing zone is given by

$$\overline{\rho}_m = \frac{P}{\overline{R}_m\,\overline{T}_m}$$

Downloaded by CARLETON UNIVERSITY LIBRARY on November 29, 2014 | http://arc.aiaa.org | DOI: 10.2514/6.2012-3908

where, as assumed by Simon,

$$\overline{T}_m = T_{aw_{x1}}$$

Mixing region growth rate

The works of Marek et al.[10,11] and Simon[12] highlighted the influence of both co-flowing fluids turbulence intensities at inlet on film cooling effectiveness. Simon's model related these quantities to the spatial growth of the mixing region. Despite the good agreement with experimental data, such an approach is of little applicability if turbulence intensities at inlet are unknown, as is the case of a feasibility study for a liquid rocket engine. For this reason, a different approach was considered for computing the mixing coefficient C_m. As described in Simon's Model,[12] C_m is equivalent to the growth rate of the mixing region db/dx. Abramovich[1] showed that for an incompressible shear layer between two co-flowing streams with different velocities, the shear layer growth rate is given by

$$\frac{db}{dx} = \pm c\,\frac{R-1}{R+1}$$

where b is the shear layer thickness. According to Abramovich, the constant c is taken equal to 0.27 when the fluids are the same. In the present work, since the two fluids have different composition, the more general formulation provided by Abramovich of the c parameter was considered more suitable and provided the best expected estimation of x_1:

$$c = \frac{0.27}{2}\,\frac{\left[1+\left(\dfrac{\rho_\infty}{\rho_s}\right)^{1/2}\right]}{\left(\dfrac{\rho_\infty}{\rho_s}\right)^{1/2}}$$

In fact to the authors' knowledge no estimations of x_1 in combustion chamber environment conditions are available in open literature. The estimation was deduced by looking at the experimental results of Suslov[13] which will be used as a test case for the model.

C. Layered model

Several attempts to model the two-way coupling through the exchanged quantities were done, but no successful one was found. Hence, a simpler model was researched and conceived.[15] Breaking down the coupling between the main stream, mixing and potential-core zones, the flow field was supposed to be given by superimposing of two flow field layers.

Since the outputs of interest for the model are the adiabatic wall temperature and heat fluxes towards the chamber walls, such an approach could represent a good compromise between accuracy and simplicity. Referring to the same formulation as in equation (2), the 1-D layered model equations are presented hereafter.

Layer A: mainstream and coolant governing equations

$$\boldsymbol{u}=A\begin{bmatrix}(\rho)_s\\(\rho)_c\\(\rho)_c\,x^{nc}\\(\rho v)_c\\(\rho E)_s\\(\rho E)_c\end{bmatrix};\quad f(\boldsymbol{u})=A\begin{bmatrix}(\rho v)_s\\(\rho v)_c\\(\rho v)_c\,x^{nc}\\(\rho v^2+P)_c\\(\rho v h)_s\\(\rho v h)_c\end{bmatrix};\quad S(\boldsymbol{u})=\begin{bmatrix}0\\0\\0\\[-0.5(d\xi/dx)\rho\ v|v|A+\rho g A+P(dA/dx)]\\\left(d\dot{Q}_s/dx\right)\\\left(d\dot{Q}_c/dx\right)\end{bmatrix}$$

Layer B: mixed fluid governing equation

$$\boldsymbol{u} = (\rho E A)_m;\quad f(\boldsymbol{u}) = (\rho v h A)_m;\quad S(\boldsymbol{u}) = d\dot{Q}_m/dx + (\rho v h A)_{c2m} + (\rho v h A)_{s2m};$$

The mixing region properties are determined by the properties of the fluids on layer A in a one-way dependency, from layer A to layer B: the energy inflows terms $(\rho v h A)_{c2m}$ and $(\rho v h A)_{s2m}$ are indeed only

Downloaded by CARLETON UNIVERSITY LIBRARY on November 29, 2014 | http://arc.aiaa.org | DOI: 10.2514/6.2012-3908

present in the mixing energy equation. Algebraic equations based on geometrical considerations and on the fluid properties of the streams on layer A are used to evaluate the mass and energy fluxes as well as the density of the mixed fluid:

$$(\rho v h A)_{c2m} = (\rho v h)_c \, A_{c2m}$$
$$(\rho v h A)_{s2m} = (\rho v h)_s \, A_{s2m}$$

The area terms represent the interface area between two adjacent zones and are determined by the assumed geometry of the flow field (which depends on time). Purely geometrical algebraic equations are used to evaluate the mass flow rates in the mixing zone:

$$(\rho v A)_m = ((\rho v A)_s + (\rho v A)_c) \, \frac{A_m}{A_{cc}}$$

being A_m and A_{cc} the section area of the mixing zone and the total section, respectively.

This system of equations is incomplete since there are more unknowns than equations therefore algebraic equations will provide the required closure equations, choosing the integration variables in a convenient way.

Following the same approach of the combustion chamber model of the ESPSS libraries, the centred numerical scheme is adopted.

$$\dot{m}_s = (\rho v A)_s$$

Since A_c for every section is equal to the area of the film injector, this equation states that the film cooling is regarded as a flow in a constant area duct.

Once the mass flow rates of the two co-flowing streams are known, for a given geometry of the flow field, the energy exchanges towards the mixing layer can be computed. Indeed, these quantities are given by

$$(\dot{m} h)_{c2m,i} = \dot{m}_{c2m} h_{c,i}$$
$$(\dot{m} h)_{s2m,i} = \dot{m}_{s2m} h_{s,i}$$

In this way, it is possible to assume the exchanged mass flow rates to be given by the following geometrical considerations

$$\dot{m}_{c2m,i} = \dot{m}_c A_{c2m,i} \tag{7}$$

$$\dot{m}_{s2m,i} = \dot{m}_s A_{s2m,i} \tag{8}$$

Finally, the area terms appearing in Eqs.(7) and (8) are determined for each time step. Said $A_{c,i}$ and $A_{s,i}$ the areas of the right side of the ith volume, shown in Figure 4, these are given by

$$A_{c2m,i} = A_{c,i-1} - A_{c,i}$$
$$A_{s2m,i} = A_{s,i} - A_{s,i-1}$$

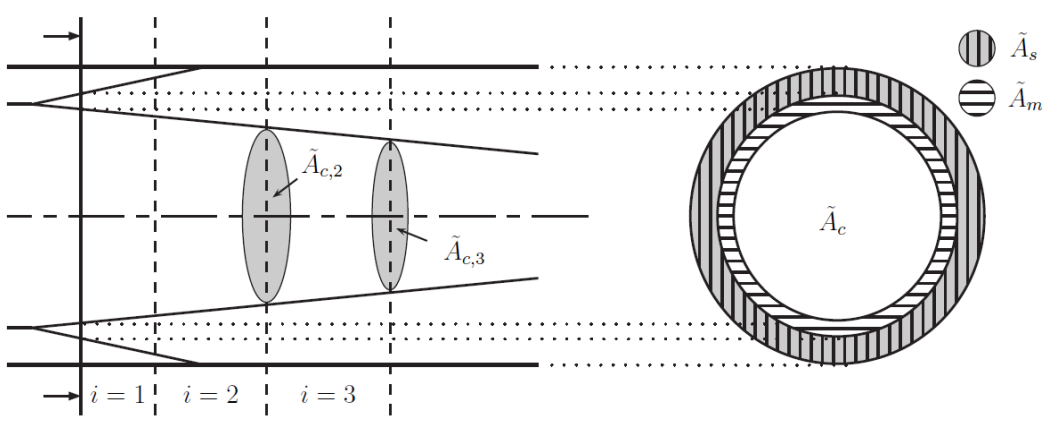

Figure 4. Geometry of the developed flow field

Downloaded by CARLETON UNIVERSITY LIBRARY on November 29, 2014 | http://arc.aiaa.org | DOI: 10.2514/6.2012-3908

	From ref.[2]			From ref.[13]	
Test Interval	1	2	3	1	2
Hot-gas conditions					
P_{cc} [bar]	119.4	118.4	116.2	111	111
$\dot{m}_{fu,o}$ [kg/s]	0.6	0.6	0.6	0.5	0.6
$\dot{m}_{ox,o}$ [kg/s]	3.62	3.61	3.61	3.0	3.6
$\dot{m}_{tot}$ [kg/s]	4.22	4.21	4.21	3.50	4.20
MR	6.03	6.02	6.02	6	6
$T_{ox,o}$ [K]	113.5	111.5	111.2	?	?
$T_{fu,o}$ [K]	287.9	285.5	283.1	?	?
Coolant conditions					
$(\dot{m}_s/\dot{m}_{tot})\%$	1.83	1.03	0	2	1
$\dot{m}_s$ [kg/s]	0.077	0.043	0	0.07	0.042
$T_{s,o}$ [K]	287.5	287.5	-	T_{amb}	T_{amb}
M	2.85	1.61	0	?	?
v_s/v_∞ $(=1/R)$	1.6	0.91	0	?	?

Table 1. Experimental data of the test case operational conditions.[2,13] Highlighted in light-gray the missing information computed from the available one

III. Validation/Results

A. Test case set-up

The experimental campaign conducted by Suslov et al.[13] at the German Aerospace Center (DLR) site in Lampoldshausen, was retained as a suitable test case for this work. The experiment examined film cooling effectiveness in a Vulcain 2-like Subscale Combustion Chamber "E". The cryogenic combination LOX/GH_2 was used as propellants whilst ambient temperature gaseous hydrogen was injected as film coolant from the injector plate through ten slots evenly distributed in the circumferential direction, which provide a tangential injection condition in the axial direction.
The experiment ran for 80 s and three pressure intervals were considered: 115 bar, 80 bar and 50 bar, all of which with a constant mixture ratio $MR = 6$. Each pressure interval has been divided into three steps of different injected film mass flow rate. For the present work only the first level of pressure was considered. The operational conditions are summarised in Table 1.

The validation of the model was done by comparing experimental results in terms of Net Heat Flux Reduction (NHFR), defined as:

$$NHFR = 1 - \frac{q_{ws}}{q_0}\left(\frac{p_{cc,0}}{p_{cc,ws}}\right)^{0.8} \tag{9}$$

The subscript $(\cdot)_0$ denotes the quantities without film cooling and $(\cdot)_{ws}$ the ones with film cooling. Six thermocouples located at 37, 52, 67, 97, 127, 157 mm downstream of the injector plate provided the combustion chamber wall temperatures used for the evaluation of the heat fluxes through the inverse method.
The hot gas side wall temperature is taken as the boundary condition for the thermal problem at the inner surface of the combustion chamber wall. The temperature values at the six measurement points[13] were linearly interpolated to provide a boundary condition for each node. Figure 5(a) depicts the wall temperature distribution assigned for the simulations with and without film cooling. The temperature after the last measurement point was set constant until the throat, whilst a linear trend was imposed before the first measurement location. Ambient conditions were set at the nozzle exit port in order to reproduce the same environmental conditions of the experiment. By running two simulations with and without film cooling it was possible to compute the NHFR and to assess the predictions of the model.

B. Modelling

To limit the complexity of the simulation and focus on the functionality of the developed models, a simple system was designed[15] as depicted in Figure 5(b). The Vol_TMD and jun_TMD components provide the needed time-dependant boundary conditions. These former sets the thermodynamic state whilst the latter the mass flow rate. The dynamical evolution of the latter quantity is controlled by a desired value reached with a time delay.[7]

Downloaded by CARLETON UNIVERSITY LIBRARY on November 29, 2014 | http://arc.aiaa.org | DOI: 10.2514/6.2012-3908

Downloaded by CARLETON UNIVERSITY LIBRARY on November 29, 2014 | http://arc.aiaa.org | DOI: 10.2514/6.2012-3908

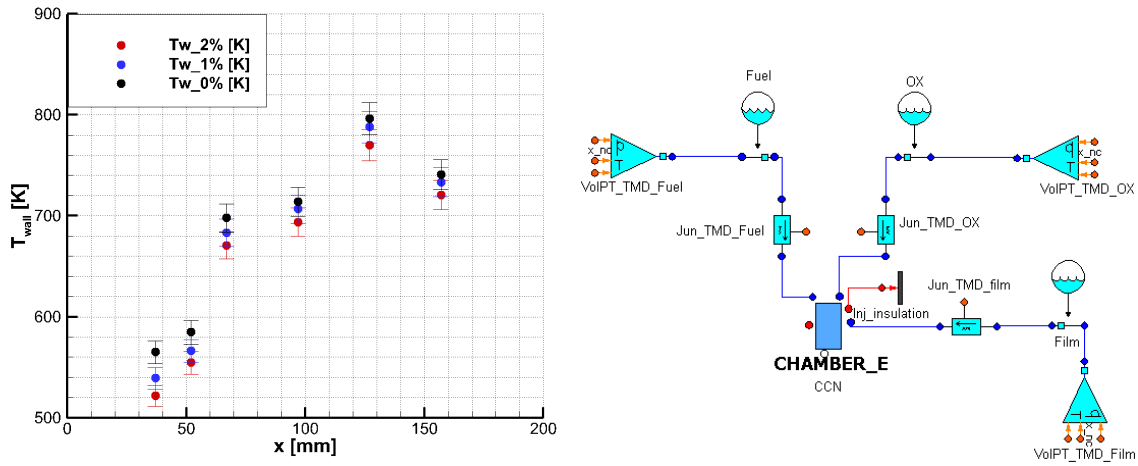

(a) (b)

Figure 5. (a)Hot gas side temperature boundary condition; (b) Schematic view of the simulation setup for the test case

The pressure ratio factor of Equation (9) was neglected and assumed equal to one, since the contribution of the coolant to chamber pressurisation is not taken into account by the model.
An important issue is the film injector slot height. In the experiment, a discrete 2-D slot geometry was adopted whilst the film cooling model developed in this work assumes a 1-D circumferential slot geometry. If the experimental mass flow rate and slot height are imposed, this will lead to the correct average velocity value, except for the near slot region, where the experimental film velocity will generally be greater than the numerical one, due to the smaller injector area.

The solution to this modelling discrepancy was found by means of an effective velocity for the evaluation of the geometry of the flow field. For a slot injector, the inlet average velocity is given by

$$\bar{v} = \frac{N_{slot}\, b}{2\pi R_{inj}}\, v_o = k\, v_o \tag{10}$$

where N_{slot} is the number of slots, b is the slot width and R_{inj} is the injector head radius. By making use of the constant k in Equation (10), the effective velocity is defined and, by means of this quantity, the key quantities (R and M) for the computation of x_1 and db/dx are evaluated:

$$v_{s,eff} = \frac{v_s}{k}\ ; \quad R = \frac{v_\infty}{v_{s,eff}}\ ; \quad M = \frac{\rho_s v_{s,eff}}{\rho_\infty v_\infty}$$

In this way important features were preserved: from the system viewpoint, the injected film mass flow rate is the same as the experimental one as well as the film slot injector height; from the physical point of view, the velocity state is well described in the fully developed region, where the velocity profile is expected to reach the inlet average value. The geometry of the flow field is determined by making use of the effective inlet velocity.

C. Results

With the simulation set-up described in the previous section the operational conditions of the experiment were reproduced. Table 2 reports the values of the relevant quantities resulting from the simulation in steady state conditions.

$\dot{m}_s$ (%)	1/R	M	$T_{ox,o}$ [K]	$T_{fu,o}$ [K]	$T_{s,o}$ [K]	p_{cc} [bar]	MR	$\dot{m}_{ox,o}$ [kg/s]	$\dot{m}_{fu,o}$ [kg/s]	$\dot{m}_{s,o}$ [kg/s]
1%	0.77	1.46	90	280	280	111.43	6	3.6	0.6	0.0434
2%	1.37	2.61	90	280	280	111.43	6	3.6	0.6	0.0772

Table 2. Operational conditions reproduced during the simulation

Downloaded by CARLETON UNIVERSITY LIBRARY on November 29, 2014 | http://arc.aiaa.org | DOI: 10.2514/6.2012-3908

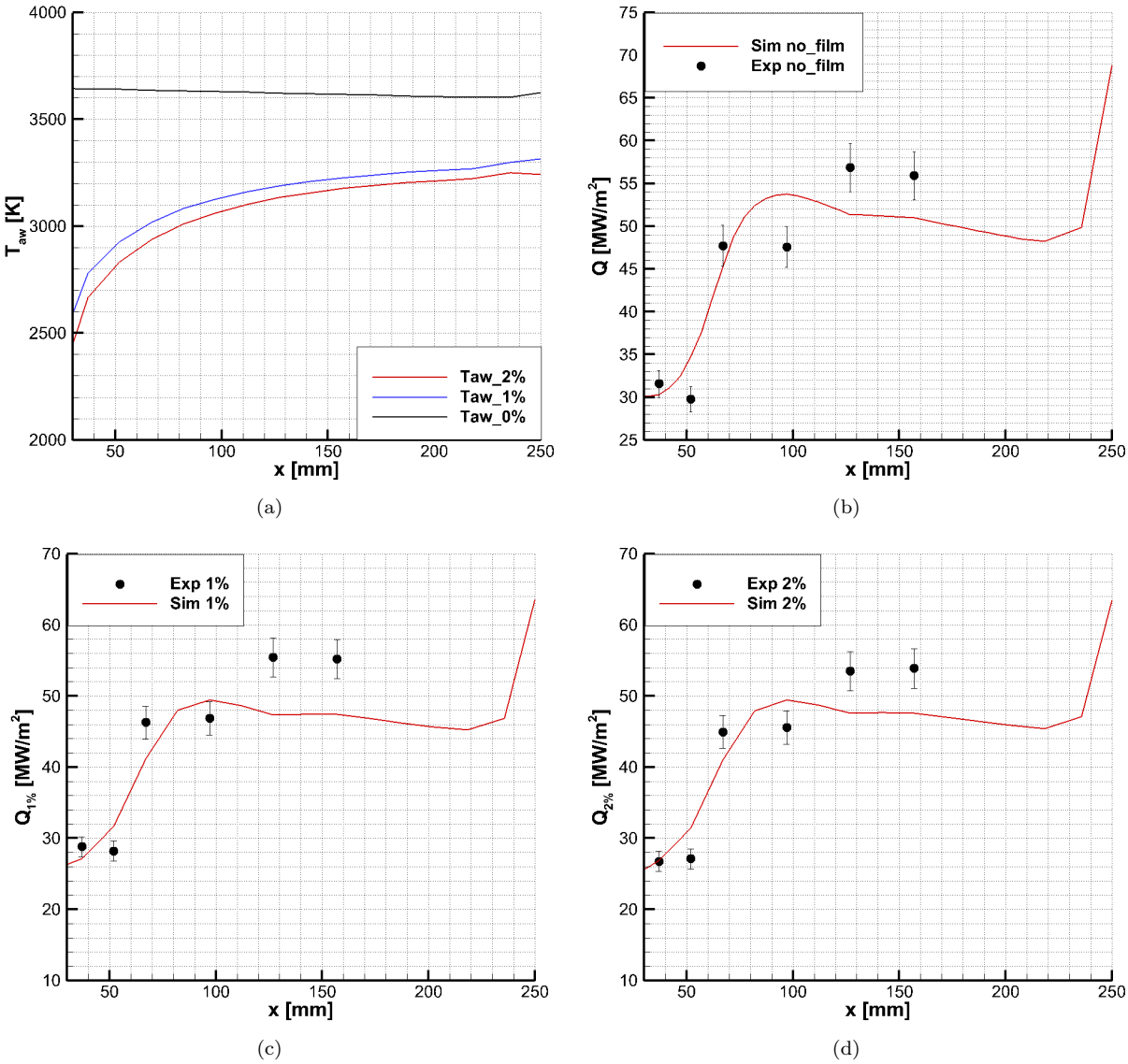

Figure 6. (a) Adiabatic wall temperature profiles; (b,c,d) Heat flux densities along the chamber

Figures 6 (a,b,c,d) show the main results in terms of heat flux densities and adiabatic wall temperature along the combustion chamber. The predictions of film cooling effectiveness were computed as

$$NHFR = 1 - \frac{q_{ws}}{q_0}$$

where q_{ws} is the heat flux density with film cooling and q_0 the heat flux density without film cooling. The results in terms of NHFR for the 1% and 2% film mass flow rate are shown in Figure 7. The red line represents a linear interpolation between the values predicted by the model marketed with red dots. The black diamond markers denote the NHFR as computed by reference.[13] The data allowed to simulate also the test case interval 2, where the film mass flow rate is reduced from 2% to 1% of the total propellants mass flow rate. In the simulation setup the only differences are the hot gas side wall temperature assigned as a boundary condition and the film mass flow rate.

The simulation results show some discrepancies when compared to the experimental results. This may due to the uncertainty and lack of precision from the experimental data found in the open literature (please compare data in Table 1). From Table 2 we notice that the velocity ratio R is greater than 1 in the 1% $\dot{m}_s$ case while is less than 1 in the 2% $\dot{m}_s$ case. This means that shear layer growth rate is positive in the first case and negative in the second one, producing a bigger mixing zone when the mass flow is higher.

From Figure 7 it is clear that the model is in good agreement with the experimental results especially for the 2% film mass flow rate case. The 1% film mass flow case is outside the wall-jet regime (where $v_s > v_\infty$), being

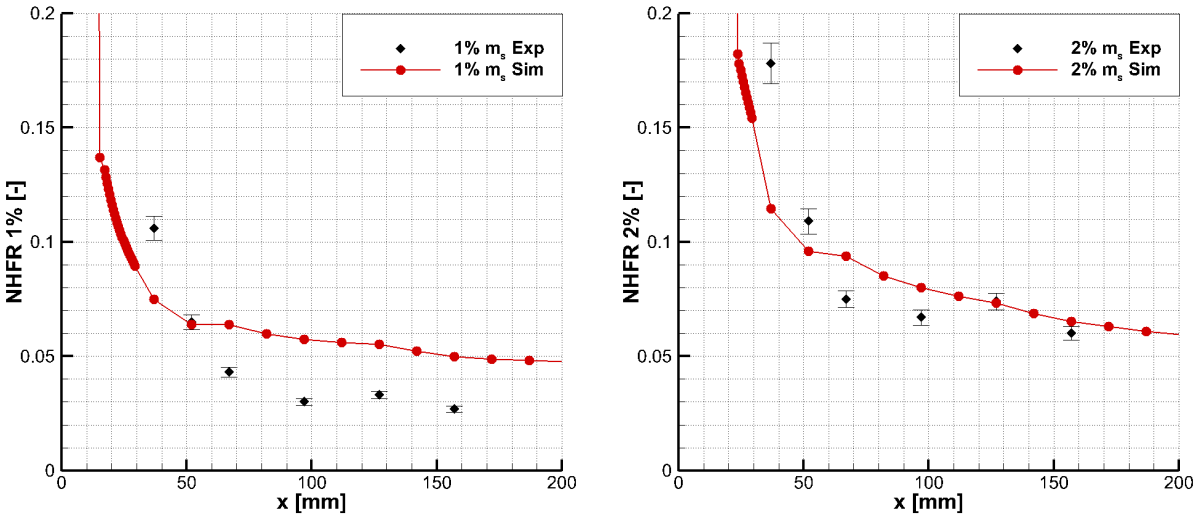

(a) (b)

Figure 7. NHFR predictions of the 1D model for 1% and 2% film mass flow rate

$1/R = 0.77$. In this regime the Simon/Abramovich model is not applicable. This could be the main reason of the discrepancy observed.

IV. Conclusions

A simple wall-jet model for cold gases has been adopted in this work, after consistent modifications to work in presence of hot gases (combustion) and two different fluids. This model has been implemented beside a new "layered" model to treat film cooling in combustion chamber in a transient propulsion system tool, and then validated with experimental results performed by DLR taken from open literature.

The simulations show an overall agreement when compared to test data, in particular when wall-jet conditions are obtained (2% $\dot{m}_s$ case). Until now the validity of the model is limited to the particular test case adopted (H_2/O_2 propellants, $MR = 6$).

In the next future the model will be validated by making use of different propellants combination (CH_4/O_2) and different operational conditions in the combustion chamber.

References

[1]G. Abramovich. *The Theory of Turbulent Jets*. MIT Press, 1963.

[2]R. Arnold, D. Suslov, and O. Haidn. Circumferential Behaviour of Tangential Film Cooling and Injector Wall Compatibility in a High Pressure LOX/GH2 subscale combustion chamber. In AIAA, editor, *44th AIAA/ASME/SAE/ASEE Joint Propulsion Conference and Exhibit*, number AIAA 2008-5242, July 2008.

[3]R. Arnold, D. Suslov, and O. Haidn. Film cooling in High Pressure Subscale Combustion Chamber. *Journal of Propulsion and Power*, Vol. 26:pp. 428–438, 2010.

[4]B. Betti, E. Martelli, F. Nasuti, and M. Onofri. Numerical Study of Film Cooling in Oxygen/Methane Thrust Chambers. In *4th European Conference for Aerospace Sciences*, 2011.

[5]K. Dellimore, A. Marshall, A. Trouve', and C. Cadou. Numerical Simulation of Subsonic Slot-Jet Film Cooling of Adiabatic Wall. In AIAA, editor, *47th AIAA Aerospace Sciences Meeting*, number AIAA 2009-1577, 2009.

[6]F. Di Matteo, M. De Rosa, and M. Onofri. Semi-Empirical Heat Transfer Correlations in Combustion Chambers for Transient System Modelling. In 3AF, editor, *Space Propulsion Conference 2010*, San Sebastian, Spain, May 2010.

[7]Empresarios Agrupados. ESPSS user manual. 2.0 edition, 2010.

[8]R. Goldstein. Film Cooling. *Advances in Heat Transfer*, vol. 7:pp. 321–378, 1971.

[9]Sanford Gordon and Bonnie J. McBride. Computer program for calculation of complex chemical equilibrium compositions and applications. Technical Report RP-1311, NASA, 1994.

[10]C. Marek and A. Juhasz. Combustor Liner Film Cooling in the Presence of High Free Stream Turbulence. Technical Note NASA TN D-6360, NASA, 1971.

[11]C. Marek and R. Tacina. Effect of Free Stream Turbulence on Film Cooling. Technical Note NASA TN D-7958, NASA, 1975.

[12]F. F. Simon. Jet Model for Slot Film Cooling with Effect of Free-Stream and Coolant Turbulence. Technical Paper TP-2655, NASA, October 1986.

[13]D. Suslov, R. Arnold, and O. Haidn. Investigation on Film Cooling Efficiency in a High Pressure Subscale LOX/H2

Downloaded by CARLETON UNIVERSITY LIBRARY on November 29, 2014 | http://arc.aiaa.org | DOI: 10.2514/6.2012-3908

Combustion Chamber. In *AIAA/ASME/SAE/ASEE 47th Joint Propulsion Conference and Exhibit*, number 2011-5778, July 2011.

[14]D. Suslov, B. Betti, T. Aichner, S. Soller, F. Nasuti, and O. Haidn. Experimental Investigation and CFD-Simulation of the Film Cooling in O2/CH4 Subscale Combustion Chamber. In 3AF, editor, *Space Propulsion Conference 2012*, May 2012.

[15]M. Venanzi. A System Approach for Modelling and Simulation of Combusiton Chambers with Film Cooling. Master's thesis, University of rome "La Sapienza", 2012.

Downloaded by CARLETON UNIVERSITY LIBRARY on November 29, 2014 | http://arc.aiaa.org | DOI: 10.2514/6.2012-3908